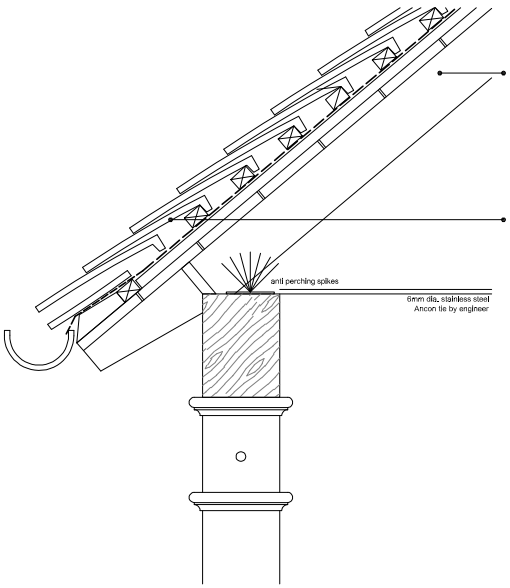

ROOF STRUCTURE TO ENTRANCE PAVILION & COVERED LINK - Cut and Pitch

Refer to Structural Engineer for details, for rafter sizes all at 400mm centres. Rafters to be spiked to 100x75mm wall plate.

Covered link generally consists 144x144mm Oak posts, with 194x144mm Oak tie beam, and stainless steel ties, all to engineer's details.

Posts to be supported on stone staddle stones, with purpose made stainless steel connections at head, & to foundations, to engineer's details.

PITCHED ROOF COVERINGS

Plain clay tiles (to match existing, & to be specified) as indicated upon drawings with clay ridge tiles (non ventilating) fixed to 38x25mm tanalised softwood battens laid over TYVEK Supro Plus breathable underlay, on 38x25mm tanalised softwood counter battens, on 94x19mm sw boarding to top of rafters. Felt to be dressed over sprocket and into gutter. All to be installed in strict accordance with the manufacturer's recommendations and details. Tiling to extend to overhang centre line of gutters. Eaves to be finished with exposed rafter feet, as indicated. Ridge tiles to be mechanically fixed within 900mm of gables, all in accordance with BS5534: Part1 1997.

1 TYPICAL EAVES TO COVERED ETERNAL WALKWAY
scale: 1/5 @A1

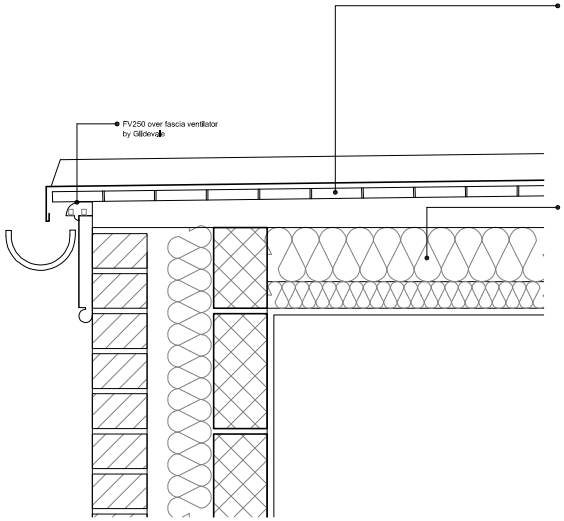

FLAT ROOF STRUCTURE & COVERING

(new extension - type FR1)

Softwood flat roof joists, @400mm centres, to engineer's details, to receive 50mm wide 50mm min. deep firrings to provide 1 in 80 fall. 100x19mm thick sw boarding to form decking, laid to minimum 1 in 80 fall to gutter. The deck to be securely fastened to the substructure using screws or galvanised annular ring shanked nails.

Decking to receive Code 7 leadwork to fall minimum 1 in 80 with each bay no greater than 2500mm in length, complete with lead rolls at 800mm max. centres, all on geotextile separating underlay. Each step to be minimum 40mm with anti capillary groove. Provide Code 4 lead cover flashing at abutments. All work to be carried out in accordance with the Lead Development Association's recommendations. All leadwork to be carried out in strict accordance with the LSA recommendations & Lead Sheet Manuals. All leadwork to be finished with patination oil.

FLAT ROOF INSULATION & VENTILATION (insulation type IN2)

Insulate flat ceiling to extension with 100mm thick Celotex GA3100 insulation between rafters, applied in strict accordance with manufacturer's instructions. Ensure insulation to be provided between the rafters is friction fitted and pushed up tight to the underside of the stop nails. Maintain min.50mm air gap above insulation to underside of decking. Fit 50mm thick Celotex GA3050 insulation (joints tightly butted) to underside of flat roof joists. Tape and fill joints to form vapour control and air leakage barrier in accordance with the manufacturer's specification (all to achieve a U value of 0.15 W/m2K).

Provide 25mm minimum continuous air gap between fascia and soffit to ventilate roof void along with a continuous 25mm ventilation path provided by rigid metal flashing and rigid upstand at abutment with existing pitched roof.

1 TYPICAL EAVES TO FLAT ROOF TO BOOT ROOM
scale: 1/5 @A1

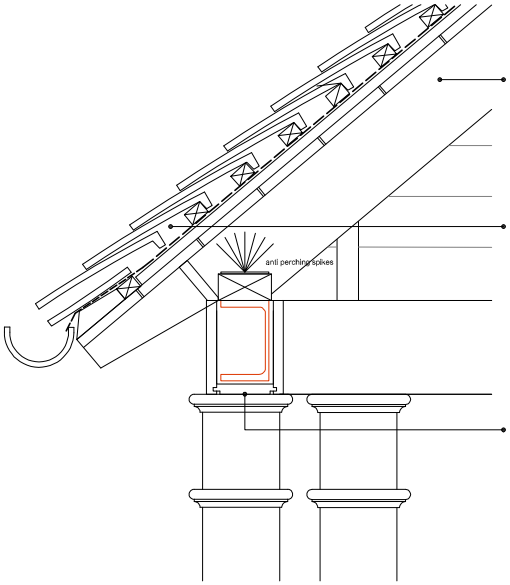

ROOF STRUCTURE TO ENTRANCE PAVILION & COVERED LINK - Cut and Pitch

Refer to Structural Engineer for details, for rafter sizes all at 400mm centres. Rafters to be spiked to 100x75mm wall plate.

Covered link generally consists 144x144mm Oak posts, with 194x144mm Oak tie beam, and stainless steel ties, all to engineer's details.

Posts to be supported on stone staddle stones, with purpose made stainless steel connections at head, & to foundations, to engineer's details.

PITCHED ROOF COVERINGS

Plain clay tiles (to match existing, & to be specified) as indicated upon drawings with clay ridge tiles (non ventilating) fixed to 38x25mm tanalised softwood battens laid over TYVEK Supro Plus breathable underlay, on 38x25mm tanalised softwood counter battens, on 94x19mm sw boarding to top of rafters. Felt to be dressed over sprocket and into gutter. All to be installed in strict accordance with the manufacturer's recommendations and details. Tiling to extend to overhang centre line of gutters. Eaves to be finished with exposed rafter feet, as indicated. Ridge tiles to be mechanically fixed within 900mm of gables, all in accordance with BS5534: Part1 1997.

Proposed steel ring beam to entrance pavilion roof to be encased in 25mm thick Oak, as indicated, to match overall dimensions of Oak to covered walkway

2 TYPICAL EAVES TO ENTRANCE PAVILION
scale: 1/5 @A1

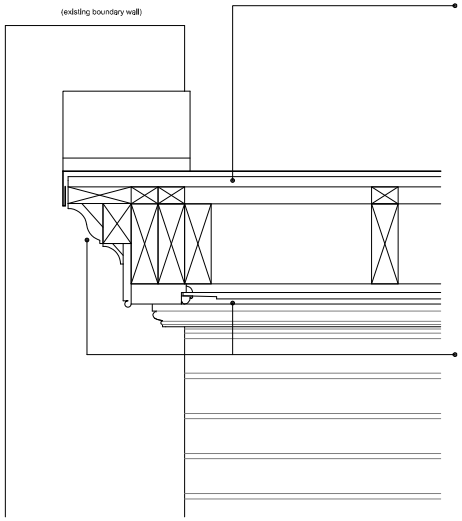

FLAT ROOF STRUCTURE & COVERING

(new extension - type FR1)

Softwood flat roof joists, @400mm centres, to engineer's details, to receive 50mm wide 50mm min. deep firrings to provide 1 in 80 fall. 100x19mm thick sw boarding to form decking, laid to minimum 1 in 80 fall to gutter. The deck to be securely fastened to the substructure using screws or galvanised annular ring shanked nails.

Decking to receive Code 7 leadwork to fall minimum 1 in 80 with each bay no greater than 2500mm in length, complete with lead rolls at 800mm max. centres, all on geotextile separating underlay. Each step to be minimum 40mm with anti capillary groove. Provide Code 4 lead cover flashing at abutments. All work to be carried out in accordance with the Lead Development Association's recommendations. All leadwork to be carried out in strict accordance with the LSA recommendations & Lead Sheet Manuals. All leadwork to be finished with patination oil.

Form sw cornice to underside of lead roof, as indicated, with purpose made sw panelled ceiling to external area, all to receive paint finish.

2 TYPICAL EAVES TO FLAT ROOF TO MAIN ENTRANCE (DG01)
scale: 1/5 @A1

Notes:

Please report all discrepancies, errors and omissions.

Verify all dimensions on site before commencing any work on site or preparing shop drawings.

All materials, components and workmanship are to comply with the relevant British Standards, Codes of Practice, and appropriate manufacturers recommendations that from time to time shall apply.

For all specialist work, see relevant drawings.

This drawing and design are copyright of BDB Design.

When this document is provided in electronic file format it is intended as a guide only and the recipient is to verify all dimensions and details with the Architects. If this is not acceptable, the files must be returned unused together with a written communication declining acceptance of this condition.

Revisions :
rev date revision

design bdb

Church Barn, Milton Manor Farm, Ashford Road, Canterbury, Kent. CT4 7PP
t: 01227 456699 www: bdb-design.co.uk

project title
MR & MRS W. BRETT
Proposed extensions & internal alterations
Lower Court, Ottinge

drawing title
Typical eaves details

scale	drawing number	rev.
1/10 @A1	3047-130	
date March 2020		